OPTIMUM ARCHITECTURAL STEEL WINDOWS

Vol 1.0

RTS430 + ® SERIES OVV

OptimumWindow.com \ 845.647.1900

FULLY WELDED thermallybrokenhot-ROLLEDSTEEL WINDOW & DOOR SYSTEM

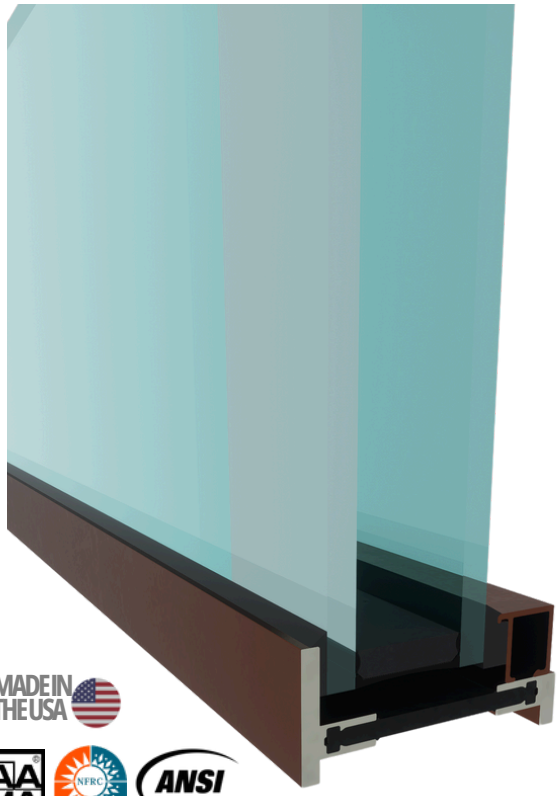

MADE IN THE USA

AAMA NFRC ANSI

PRODUCT DESCRIPTION

Optimum's Thermally Broken Technology in the form of the RTS-430+ line is renown for its thin sightlines and beauty. The RTS-430+ Series also offers reliability, versatility and thermal-efficiency. Having surpassed vigorous testing requirements, the RTS-430+ is proudly NFRC Certified. Optimum continues to work with architects that require custom designs for their applications, bringing performance and structural excellence together seamlessly; combining beauty and style with strength and reliability through the use of new computerized machinery for cutting, welding, punching, etc. The look is not simply distinctive, it is unique.

304 STAINLESS STEEL MATERIAL

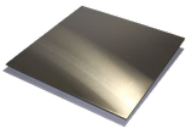

FEATURES

- Thermally Broken Hot-Rolled Steel window sections
- Stainless Steel 304 Material; Corrosion resistant
- 2 9/16" exterior frame depth
- EPDM Weather-Stripping
- Excellent Thermal Values
- True Divided Lites & Applied SDLs available.
- Zinc Rich Epoxy Primer
- Limited Operation Stops available.
- Multi-Point & Single-Point Locking Hardware available
- Options for Premium and Custom Hardware available
- Electrostatically applied, colored, polyester powder
- coated finish. Meets AAMA 2604 specification (2605
- optional)
- 10 year warranty on Powder Coated Finish.
- Monolithic Glazing option available.
- Non-Metallic Custom Color Match option available.

AUTHORIZED DIMENSIONS	MIN	MAX
Casement	18"x18"	37 1/8"x96 1/16""
Projected	14"x14"	72"x48"
French/Double Casement	36"x18"	74 1/4""x96 1/16""
Single Door	24"x72"	42"x120"
French/Double Door	48"x72"	84"x120"

Units may exceed maximum sizes listed through engineering, reinforcing profiles and/or hardware modifications. Contact an Optimum Window specialistfor assistance.

DETAILS

Forcompleteset,visit:www.OptimumWindow.com

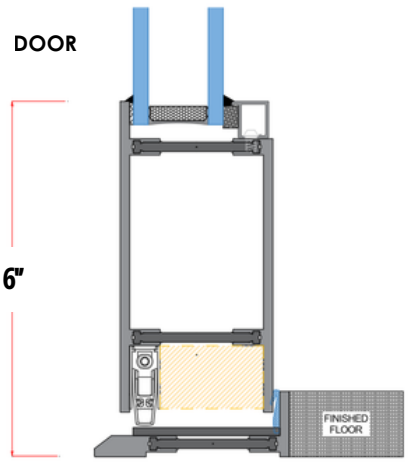

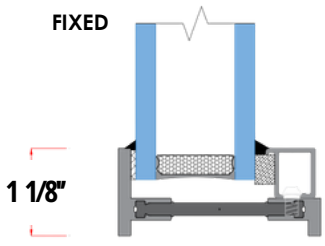

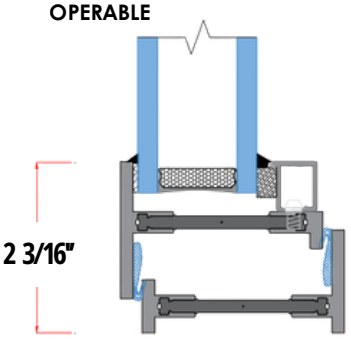

TECHNICAL SPECIFICATIONS

Tested in Accordance w/	AAMA/WDMA/CSA 101/I.S.2/A44U-11, ASTM E283, ASTM E331, ASTM E330
Construction	Mitered, Welded frame and sash construction
Certification	NFRC Rated
Fabricated in the US	Yes
Glazing Infill	Can Accommodate Glazing Thicknesses from 1" up to 1 1/2"
Weight (lbs/linear ft.)	3.9438 lbs/lf total for Vent and Exterior Frame